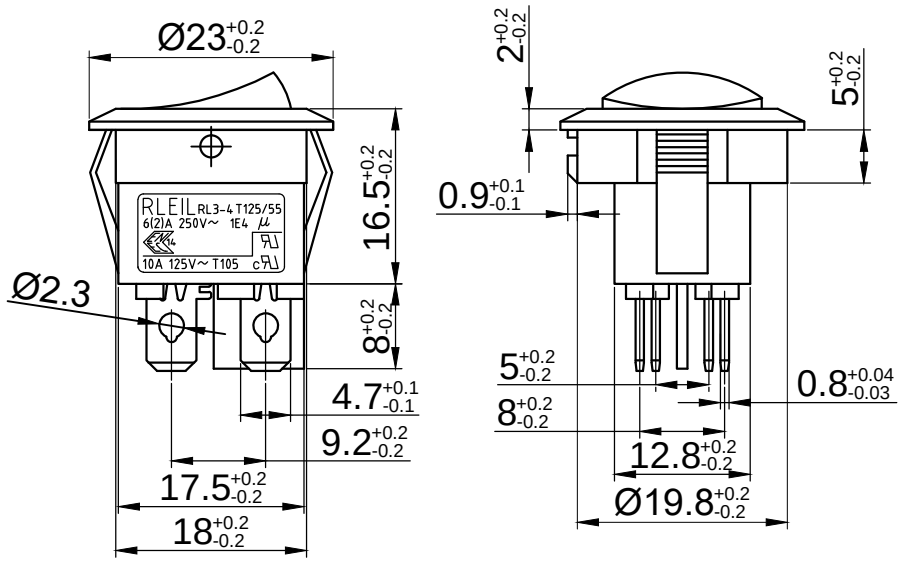

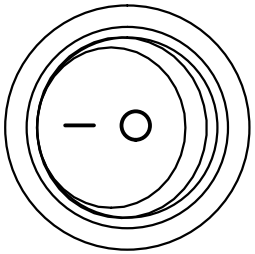

SPECIFICATION

1. RATING:UL C-UL:10A 125VAC T105
   ENEC SEMKO:
   6(2)A 250VAC T125/55 1E4
2. CIRCUIT:ON-OFF DPST 4P
3. CONTACT RESISTANCE:30m OHMS Max
4. INSULATION RESISTANCE:DC500V 100M OHMS Min
5. WITHSTAND VOLTAGE:AC 1500V 1 Minute
6. ELECTRICAL LIFE:10000 Cycles at Full Load
7. OPERATION PORCE:600～900gf
8. OPERATION TEMPERATURE RANGE:-25～125° C

PANEL HOLE SIZE

Panel thickness	X
0.75-1.25	20.2
1.25-2.0	20.4
2.0-3.0	20.6

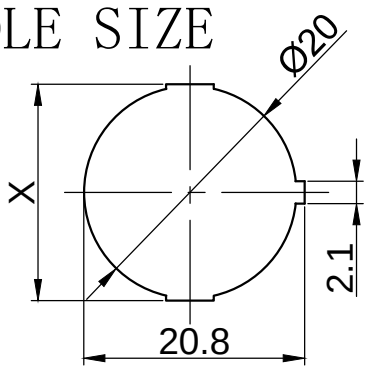

MATERIALS

1. HOUSING:Nylon #66 UL 94V-2
2. ROCKER:Nylon #66 UL 94V-2
3. TERMINAL:Copper Alloy Ag plated
4. CONTACTOR:$AgSnO_2In_2O_3$(10)/Cu

JACKSON ELECTRONICS IND. CORP. 捷森電子工業股份有限公司						JS-606-4AB/B-3	
设计	签名	年月日	标准化	签名	年月日	TITLE ROCKER SWITCH	SERIES RL3-4(R)
绘图	符辉	17.09.15					FUNCTION ON-OFF
审核	张雪飞					VIEWS TYPE	DRAWING NUMBER
工艺			批准				